KOHLER. Faucets

Margaux®
Volume Control Valve Trim
K-T16241-3

Features
- Includes faceplate with handle
- Single handle provides on/off activation and volume control
- Cross handle
- Complements Margaux faucets and accessories

Material
- Premium material construction with metal handle ensures reliability and durability
- KOHLER® finishes resist corrosion and tarnishing

Installation
- Trim only; requires valve to complete installation (sold separately)
- Patented K-joint installation technology ensures consistent trim appearance, regardless of variability in valve rough-in

Required Products/Accessories
K-2977-K 3/4" Volume Control Valve

or

K-2974-K 1/2" Volume Control Valve

Recommended Products/Accessories
K-23723 Faucet cleaner

ADA

Codes/Standards
ASME A112.18.1/CSA B125.1
ADA
ICC/ANSI A117.1
IAPMO Certification

KOHLER® Faucet Lifetime Limited Warranty
See website for detailed warranty information.

KOHLER Faucets

Margaux®

Volume Control Valve Trim

K-T16241-3

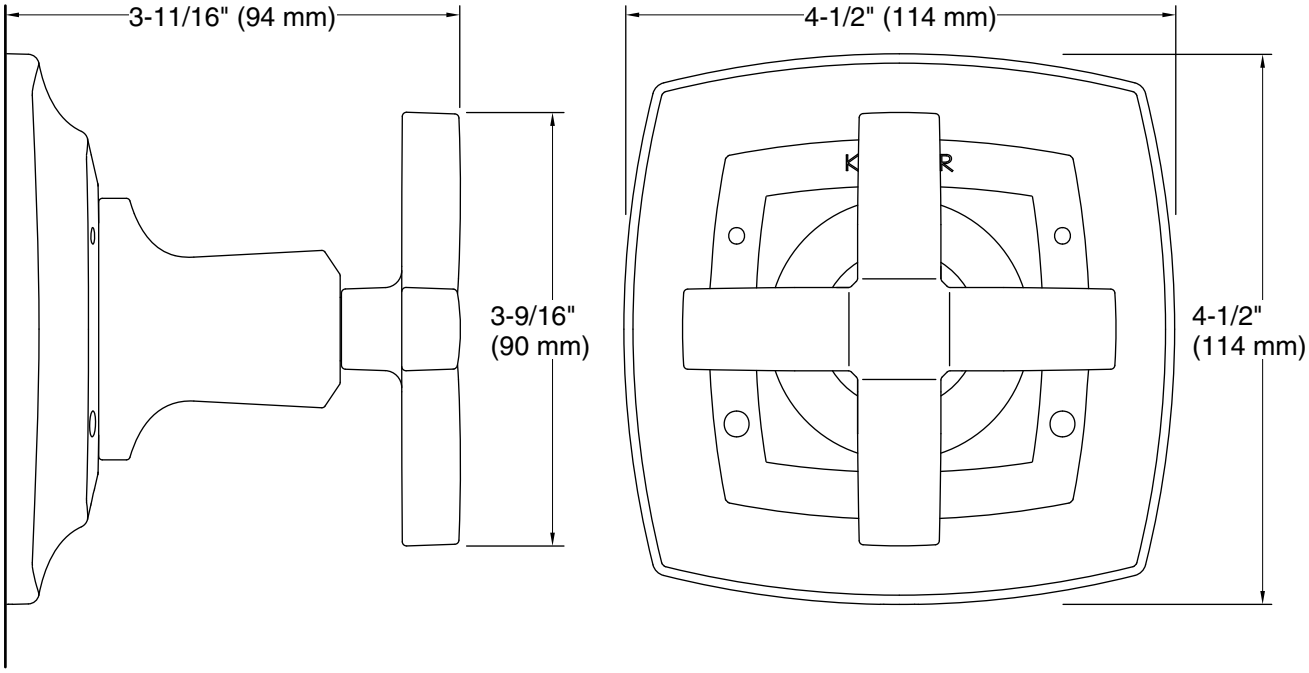

Technical Information

All product dimensions are nominal.

Notes

Install this product according to the installation instructions.

ADA compliant when installed to the specific requirements of these regulations.