KOHLER. Faucets

Purist®

MasterShower® temperature control valve trim with lever handle

K-T14488-4

Features

- Includes faceplate with handle
- Single handle controls temperature setting
- Complements Purist faucets and accessories

Material

- Premium material construction with metal handle ensures reliability and durability
- KOHLER® finishes resist corrosion and tarnishing

Installation

- Trim only; requires valve to complete installation (sold separately)
- Patented K-joint installation technology ensures consistent trim appearance, regardless of variability in valve rough-in

Required Products/Accessories

K-2975-KS 3/4" Thermostatic Mixing Valve

or

K-2972-KS 1/2" thermostatic mixing valve

Recommended Products/Accessories

K-23723 Faucet cleaner

ADA	CSA B651	OBC

Codes/Standards

ASME A112.18.1/CSA B125.1
ADA
ICC/ANSI A117.1
CSA B651
OBC
IAPMO Certification

KOHLER® Faucet Lifetime Limited Warranty

See website for detailed warranty information.

Available Colors/Finishes

Color tiles intended for reference only.

Color	Code	Description
	CP	Polished Chrome
	SN	Vibrant® Polished Nickel
	AF	Vibrant® French Gold
	BN	Vibrant® Brushed Nickel
	BV	Vibrant® Brushed Bronze
	BL	Matte Black

KOHLER Faucets

Purist®

MasterShower® temperature control valve trim with lever handle

K-T14488-4

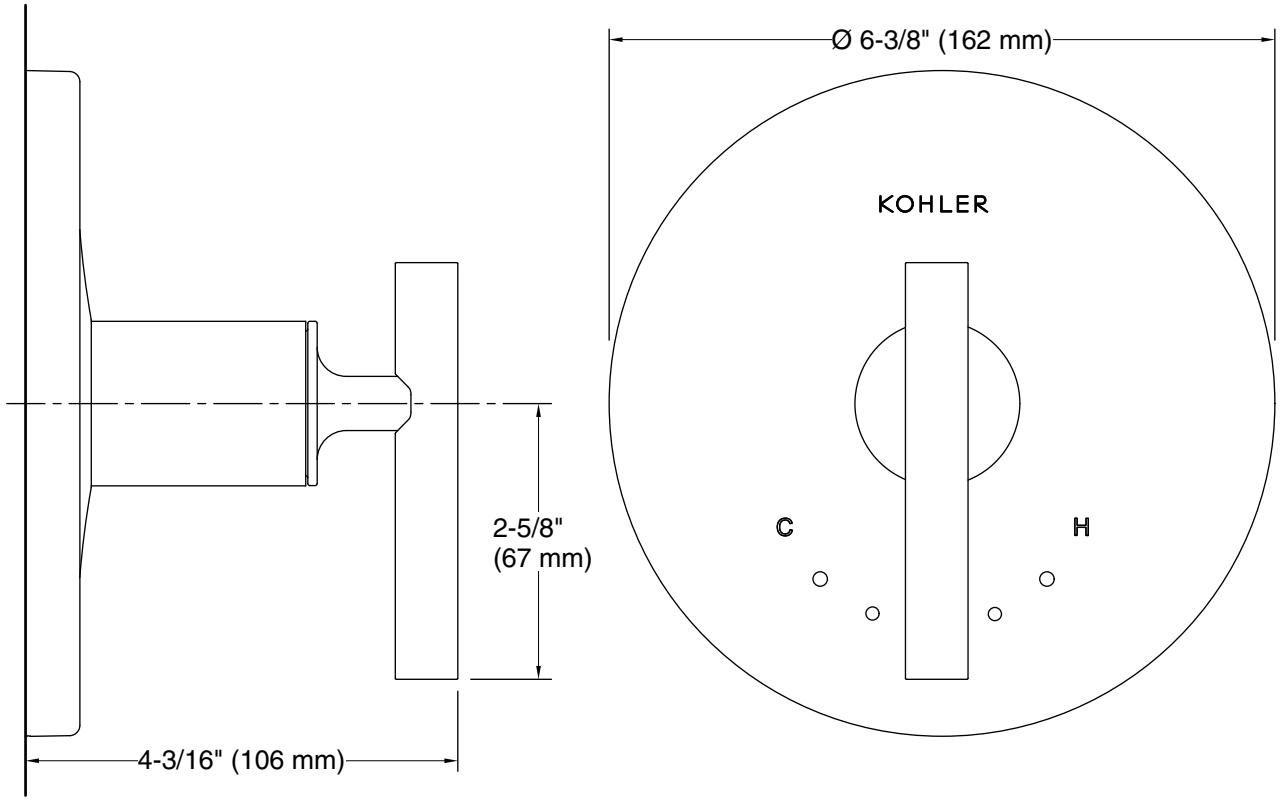

Technical Information

All product dimensions are nominal.

Notes

Install this product according to the installation instructions.

ADA, OBC, CSA B651 compliant when installed to the specific requirements of these regulations.