KOHLER®

8 Degree™
Sink Rack
K-6134

Features
- Fits in the bowl of the K-3671 8 Degree bar sink.
- Comes included with the K-3671 8 Degree bar sink.
- Helps protect sink surface from daily wear.
- Dishwasher-safe.
- Rubber feet provide added protection.

Material
- Durable stainless steel construction.

Recommended Products/Accessories
K-3671 Under-Mount Bar Sink
K-23729 Stainless steel cleaner

Codes/Standards
None Applicable

KOHLER® One-Year Limited Warranty
See website for detailed warranty information.

Available Colors/Finishes
Color tiles intended for reference only.

Color	Code	Description
	ST	Stainless Steel

KOHLER®

8 Degree™
Sink Rack
K-6134

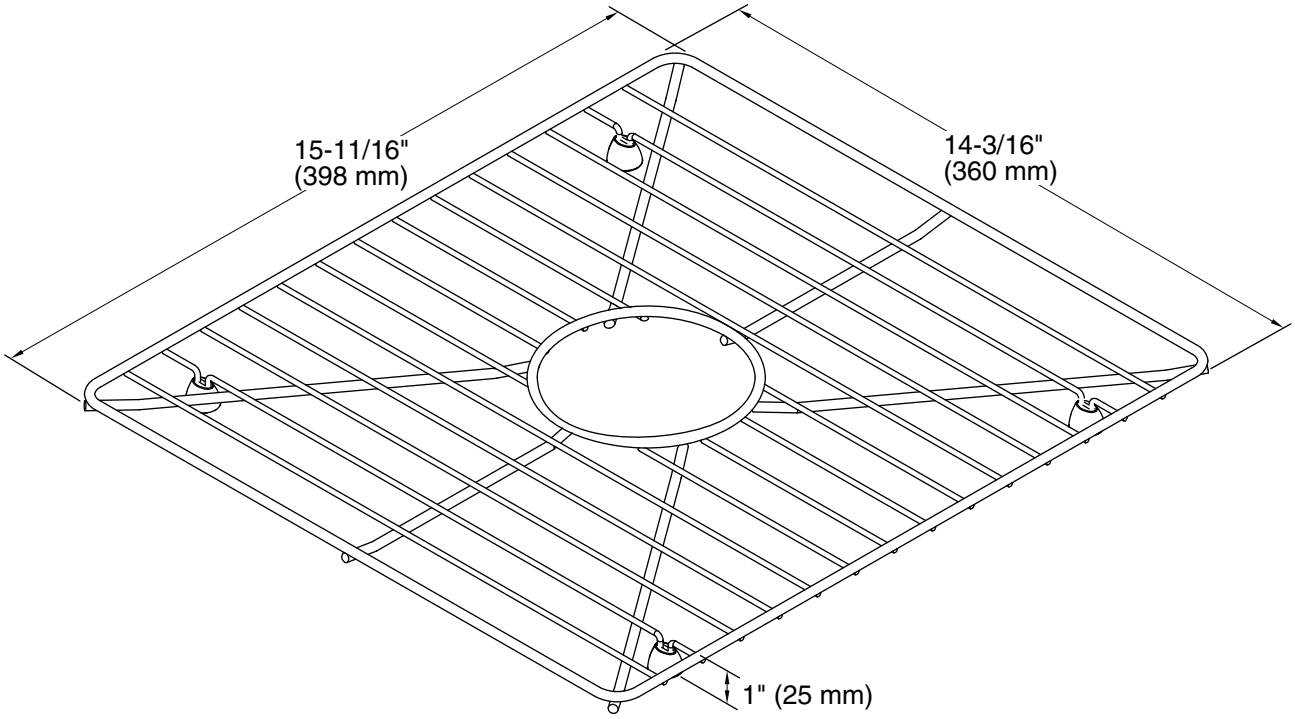

Technical Information
All product dimensions are nominal.

Material: Stainless Steel